Universal MIDI adapter: serial to MIDI (Baudrate conversion) & additional SB - PCI to MIDI
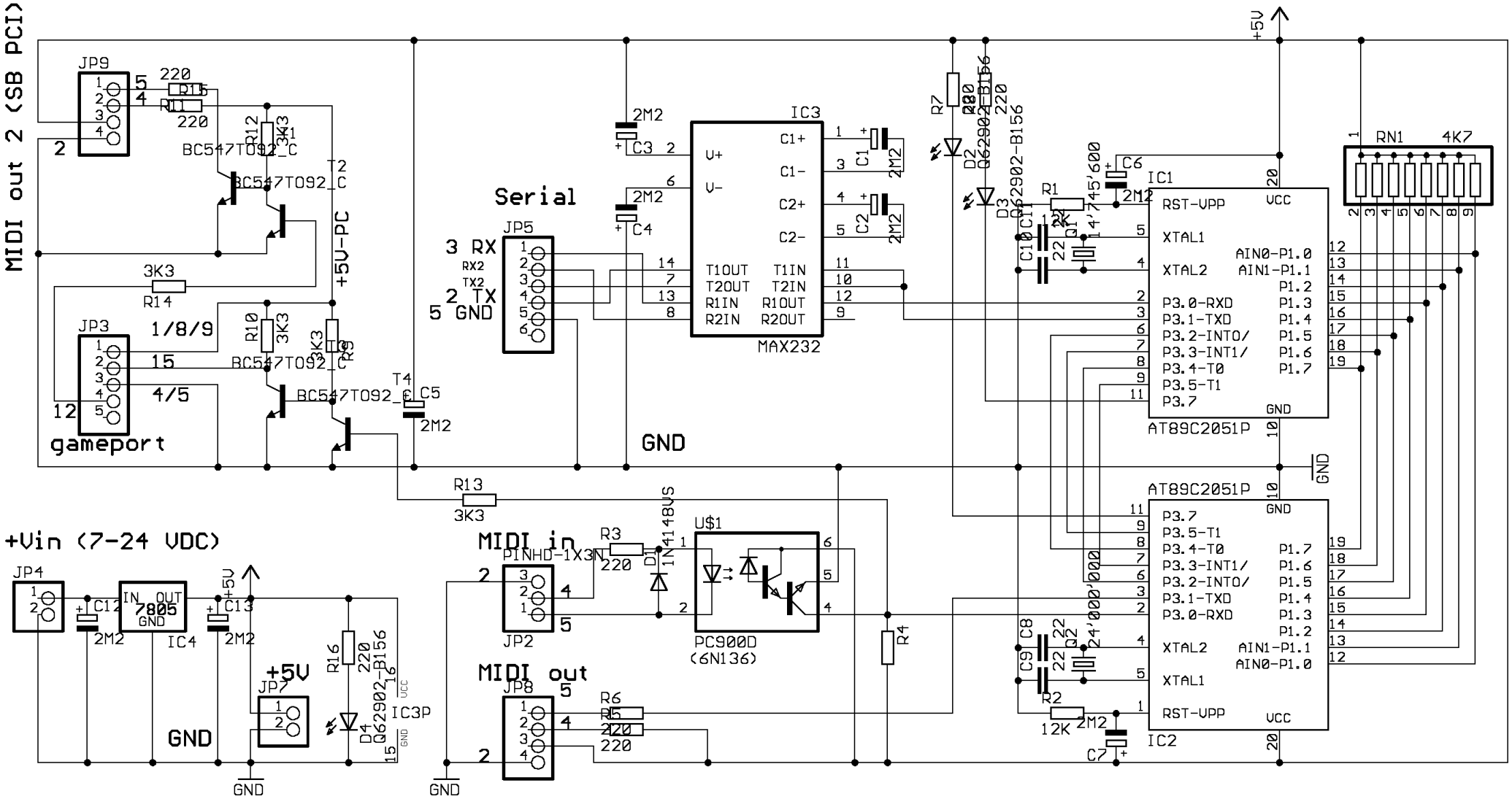
(C) by Thomas Moll / Berne / Switzerland * 7 - 06